TH	THAILAND

Diagram / Parts List

DCO180

CORDLESS CUT-OUT TOOL

2023/01

(TH) DCO180 / CORDLESS CUT-OUT TOOL

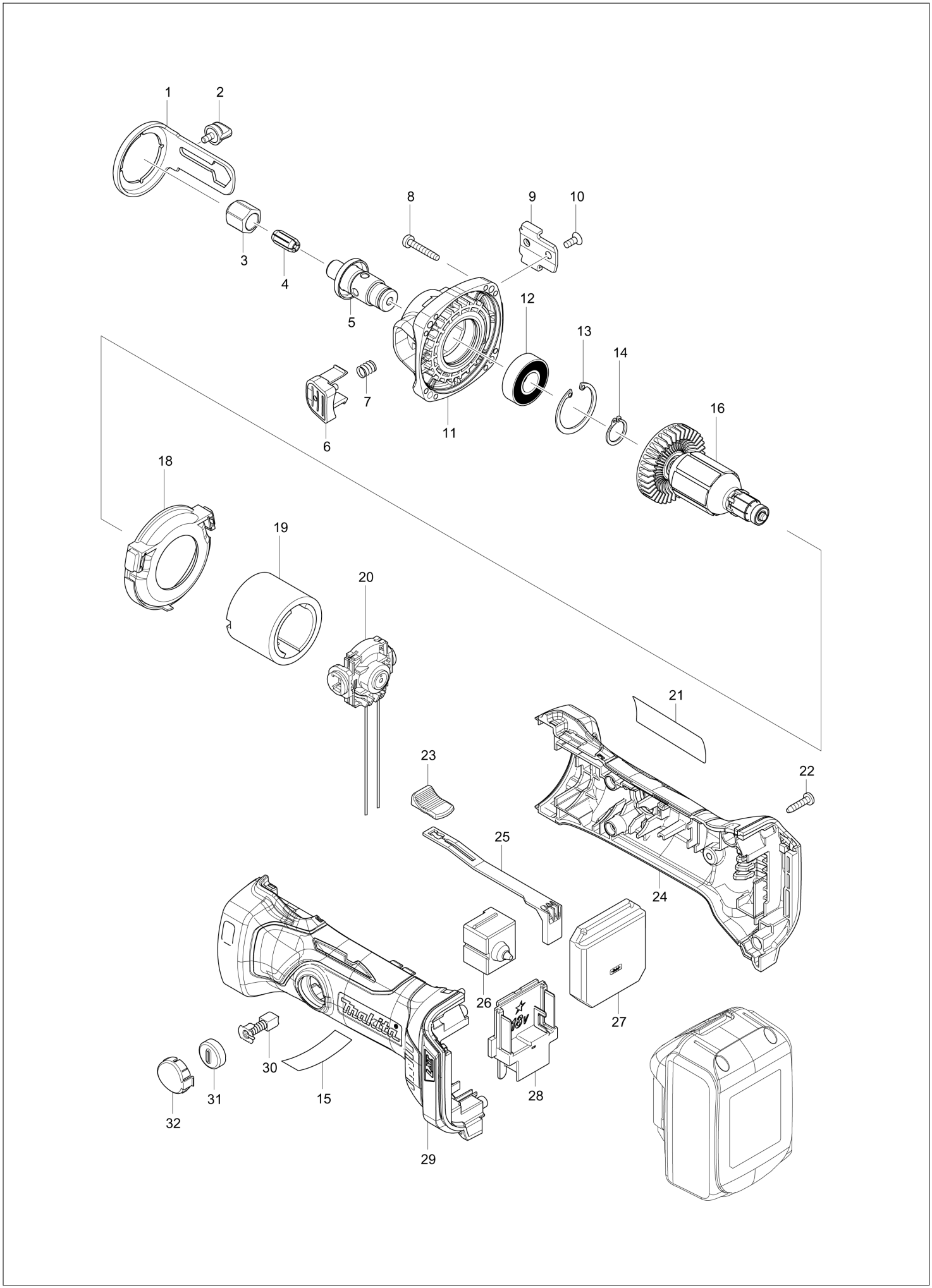

TH	THAILAND

DCO180 / CORDLESS CUT-OUT TOOL

Item	Sub	Parts No.	Parts Description	Qty	I/C	E/C No.	Close No.	Remark
001		346796-2	SHOE PLATE	1				
002		266898-7	THUMB SCREW M4X8	1				
003		763675-3	COLLET NUT	1			D3145	
003-1		763258-9	COLLET NUT	1	O	D3145		
004		763677-9	COLLET CONE 3.18	1				
005		142656-4	SPINDLE COMPLETE	1				
006		455181-9	SHAFT LOCK	1				
007		234332-5	COMPRESSION SPRING 7	1				
008		266374-1	TAPPING SCREW 4X25	4				
009		346795-4	SHOE SUPPORT	1				
010		912107-9	COUNTERSUNK HEAD SCREW M4X8	1				
011		142655-6	BEARING BOX COMPLETE	1				
012		211236-8	BALL BEARING 6002DDW	1				
013		962151-6	RETAINING RING R-32	1				
014		961055-9	RETAINING RING S-15	1				
016		619344-3	ARMATURE	1				
018		455182-7	BAFFLE PLATE	1				
019		638627-2	YOKE UNIT	1				
020		632C14-5	ENDBELL COMPLETE	1				
021		815U77-6	DCO180 NAME PLATE	1				
022		266326-2	TAPPING SCREW 4X18	5				
023		419566-3	SWITCH KNOB	1				
024		187871-3	HOUSING SET	1				
	D10		INC. 29					
025		419519-2	SWITCH LEVER	1				
026		650579-7	SWITCH 1246.3223	1				
027		620308-2	CONTROLLER	1				
	C10	654037-5	INSULATED TERM. FT1.25-M3	1				
	C20	654077-3	INSULATED TERMINAL FK2-M3D-5.5	1				
	C30	654208-4	RECEPTACLE	2				
	C40	654281-4	RECEPTACLE	1				
	C50	654304-8	RECEPTACLE	2				
028		643860-3	TERMINAL	1				
029		187871-3	HOUSING SET	1				
	D10		INC. 24					
030		195018-5	CARBON BRUSH SET CB-430	1				
031		643929-3	BRUSH HOLDER CAP	2				
032		455183-5	HOLDER CAP COVER	2				
A01		193446-8	DRYWALL GUIDE BIT 3.18 SET	2			C9892	
A01-1		191G69-8	DRYWALL GUIDE BIT 3.18 SET	2	O	C9892		
A02B		450128-8	BATTERY COVER	1				
A03B		***DC18RC	DC18RC FAST CHARGER	1				
A04B		196015-4	BATTERY BL1830 SET	2			A5588	
A04-1B		196015-4	BATTERY BL1830 SET	2	O	A5588	B2535	
A04-2B		197600-6	BATTERY BL1830B SET	2	<	B2535	C2803	
A04-3B		199283-8	BATTERY BL1830B SET	2	<	C2803	D0159	
A04-4B		199283-8	BATTERY BL1830B SET	2	<	D0159		
A05B		821619-0	PLASTIC CARRYING CASE	1				
	C10	162315-4	LATCH	2				
F15-1		199283-8	BATTERY BL1830B SET	1	<	D0159		

A:DCO180Z(N)
B:DCO180RFE(H)

Interchange
O : Yes
X : No
< : the new part can be substituted for the current.
> : the current part can be substituted for the new.
S : Interchangeable as a set.